TAASA: A SMART BODA BODA RIDER TRACKING AND SAFETY SYSTEM FOR COMMUNITY POLICING IN UGANDA.

By

DEPARTMENT OF COMPUTER SCIENCE AND ENGINEERING, SCHOOL OF COMPUTING AND ENGINEERING

A Project proposal submitted to the School of Computing and Engineering

For the Study Leading to Partial Fulfillment of Requirements for the Award of the Degree of Bachelor of Science in Computer Security And Forensics Of Uganda Technology and Management University.

Supervisor:

Mr. Ninyesiga Allan

Department of Computer Science and Engineering

School of Technology, Computing and Engineering of Uganda Technology and Management University

aninyesiga@utamu.ac.ug , +256789981418

GROUP MEMBERSHIP

	Name	Registration Number	Signature
1	Alimugonza Richard	SEP21/CSF/914U	
2	Atim Winniefred	MAY23/CSF/3319U/F	

Table of Content

Table of Contents

Declaration.... 4
Approval.... 4
Chapter 1: Introduction.... 5
1.0 Background.... 5
1.1 Problem Statement.... 6
1.2 Main Objective.... 7
1.2.1 Specific Objectives.... 7
1.3 Objective Alignment.... 8
1.4 Research Questions.... 8
1.5 Scope Of the Study.... 9
Geographical scope:.... 9
Technical scope.... 9
Content scope.... 10
1.6 Significance of the study.... 10
Chapter 2: Literature Review.... 11
2.0 Introduction.... 11
2.1 Existing Technologies.... 11
2.2 Web Based Tracking System.... 12
2.3 Comparison of Systems.... 12
2.4 Use of A.I in Transport Security.... 13
2.4.1 AI and ML in security applications.... 13
2.5 Conceptual Framework.... 15
Conceptual Framework Diagram.... 15
Chapter 3: Methodology.... 16
3.1 Data Collection.... 16
3.2 System Design and Implementation.... 17
3.3 Implementation.... 19
3.4 Testing and Validation.... 19
4.0 OUTCOMES.... 20
4.1 Measuring success.... 20
References.... 22
Appendices.... 24

Declaration

We declare that the work contained in this research proposal is our own. It has neither been presented before at UTAMU or copied from any other person's research.

ATIM WINNIEFRED ALIMUGONZA RICHARD

…… ……

Approval

Chapter 1: Introduction

Motorcycle transport commonly known as boda boda is a vital component of Uganda's urban mobility, offering affordable and flexible transport solutions. This sector significantly contributes to the economic, social, and political development of the country.

However, the sector faces significant security challenges, including frequent motorcycle thefts and deaths of riders. These incidents not only threaten the livelihoods of riders but also undermine public safety and trust in the informal transport systems.

Despite the prevalence of these crimes, current monitoring and regulatory mechanisms are inadequate, leaving law enforcement agencies with limited capacity to respond promptly and effectively.

This research project aims to develop a smart ICT system that improves the safety and traceability of riders by enabling real-time tracking, history analysis, AI-anomaly detection and automated emergency alerts to support timely rider community police intervention and police investigations.

1.0 Background

Motorcycle theft and attacks on riders are rising concerns both globally and in Uganda. According to the Uganda Police Force's annual crime report, 4,308 cases of motorcycle theft were reported in 2021. Which is a 22.7% increase from the 3,507 that were reported in 2020. Alarmingly, only 991 of the 4,315 stolen motorcycles were recovered in 2021 [1] Similar trends are observed internationally, in the Philippines,

The Philippine National Police has recorded a periodic increase in cases of stolen motorcycles across the country. According to the PNP Highway Patrol Group said that it recorded 8,203 cases of stolen motorcycles in November 2015, the PNP-HPG recorded an average of 6.2 motorcycles being stolen per day. [2] According to Worldometrics, a motorcycle is stolen every 8-10 minutes in the United States [3]. Studies indicate that motorcycles are easy to steal, disassemble and sell off in parts". [4]

In Kampala and Wakiso, the number of untraced deaths of riders and thefts of boda boda increases by day. Many of these crimes remain untraced due to lack of monitoring infrastructure in place, poor communication between riders and law enforcement entities, and limited real-time alert systems. Howe&Davis (2002) noted that despite the numerous benefits of boda bodas, they pose major disadvantages, particularly regarding crime. [5]

Police spokesperson Fred Enanga confirms that most incidents occur at night in isolated areas, often initiated by passengers who are actually robbers [6]. The other danger is the continuous transportation of two or more passengers who are robbers. In a news report on the increased theft of motorbikes, Bukedi South Region Police Commander Julius Caesar Tusingwire says the suspected criminals have been carrying out coordinated attacks on commercial motorcycle riders. [1]. The lack of regulation and digital infrastructure for this sector creates significant vulnerability for both riders and the public.

1.1 Problem Statement

The persistent rise in motorcycle theft and deaths of riders in Wakiso and Kampala metropolitan areas underscores a critical gap in current security interventions. Existing solutions, such as ride-hailing services like SafeBoda, provide basic GPS

tracking but lack a dedicated emergency response and a direct link to law enforcement. Other solutions, like free GPS trackers, often suffer from technical reliability issues and a lack of real-time, actionable data for police. Law enforcement agencies currently lack a centralized, real-time, and intelligent monitoring system, which limits their ability to prevent crimes or recover stolen bikes.

Current systems do not adequately and immediately notify police when a rider is in danger, nor do they provide forensic tools for incident investigation and evidence analysis.

This project seeks to address these gaps by developing a comprehensive security platform integrating real-time tracking using GPS modules, IoT technology for location and SOS signals, intelligent anomaly detection using Ai. The AI/IoT integration solves the problem by enabling anomaly detection e.g flagging sudden stops in isolated areas, automated alerts to fellow riders primarily and the police, as well as secure data sharing data for faster response and forensic analysis. This will facilitate rapid reporting of incidents and provide crucial data to support law enforcement investigations, thereby creating a safer environment for boda-boda riders and enhancing policing efficiency.

1.2 Main Objective

To develop and implement a smart tracking and safety system for real-time tracking and monitoring of boda-boda riders, with automated real-time emergency alerts, secure tracking and AI-driven predictive tools to enhance community policing and rider safety in Uganda.

1.2.1 Specific Objectives

- To conduct a needs analysis and gather the functional and non-functional

requirements for the system from key stakeholders. These are boda boda riders, rider associations and the police.

- To design a GPS- enabled IoT system for real time location tracking of boda bodas.
- To develop a cross-platform mobile application for riders to send emergency alerts to fellow riders and police.
- To build a web-based dashboard for community policing units and police to monitor incidents and coordinate response.
- To implement security features such as role-based access and encryption to ensure secure communication between riders and police.
- To test and validate the system prototype with a sample of local riders and local police, refining the system based on stakeholder feedback about response time, accuracy and rider satisfaction.

1.3 Objective Alignment

1. Each specific objective aligns with the research questions as follows:
2. The first objective (needs analysis) addresses research question 1 by identifying key factors and user requirements.
3. The second and third objectives (IoT design and mobile app development) relate to question 2 on integrating ICT tools for tracking and alerting.
4. The fourth objective (dashboard) supports question 3 on features for emergency response and community policing.
5. The fifth objective (security features) aligns with question 5 on necessary security measures.
6. The sixth objective (testing) evaluates question 4 on system effectiveness.

1.4 Research Questions

1. What are the key factors contributing to untraced deaths and theft of motorcycles among boda boda riders in Wakiso and Kampala metropolitan areas, including user requirements and security considerations in the Ugandan context?

2. How can ICT tools (IoT, Databases, AI and GPS technologies) be integrated to provide real-time tracking, anomaly detection and automated alerting for boda-boda riders?

3. What mobile app and dashboard features should be included to allow riders to quickly raise emergency alerts and enhance community policing?

4. How effective is the proposed system in facilitating timely law enforcement response, crime data analysis, and preventive policing (e.g., detecting risks before they escalate)?

5. What security measures are necessary to protect rider data and ensure the integrity of alerts?

1.5 Scope Of the Study

Geographical scope:

The system will be piloted in urban and suburban areas of Kampala and the metropolitan areas of Wakiso, specifically Namugongo, Nakiyanja, Ssonde, and Kyaliwajjala. These areas were selected due to their high boda-boda activity and documented high rates of theft and violence.

Technical scope

The project will focus on system design, mobile app development, IoT tracking device integration and police dashboard implementation.

It will also cover rider registration, real-time location tracking, emergency alerting, AI-based anomaly detection. The AI module will focus on anomaly detection and incident prediction by analyzing live and historical movement patterns to identify deviations from normal behavior. The technical scope is limited by reliance on stable mobile network coverage for data transmission and GPS accuracy.

Content scope

The study focuses on security and safety aspects of boda boda transport, including theft prevention, emergency response, and community policing, excluding broader urban mobility issues like traffic management or economic impacts.

Time scope

The project will span from September 2025 to May 2026, aligning with the academic calendar for development, testing, and validation.

1.6 Significance of the study

This project offers both academic and practical contributions in the following ways:

Academically, it will contribute to the body of knowledge on the application of ICT and AI in security and forensics within a developing nation context.

It is significant for its potential contributions to road safety research, capacity building in both academia and police forces, and its practical use in crime prevention and emergency response.

It will also provide valuable data for understanding the causes of bodaboda accidents and thefts and aid in the development of interventions to improve safety.

The system will also encourage formalization of the boda boda business and better law enforcement by the police in regulating the informal transport sector.

Chapter 2: Literature Review

2.0 Introduction

The literature review chapter examines existing tracking and security systems, highlighting their functionalities, strengths, limitations and weaknesses. By identifying the gaps in the current systems, this review provides the justification for the proposed system.

Motorcycle theft is a persistent problem in Uganda due to limited infrastructure and the inefficiency of traditional recovery methods (Keerthana R, 2023). The absence of a centralized platform to report and track stolen motorcycles further exacerbates the problem. The proposed system aims to address these challenges by leveraging modern technologies to enhance both security and in some instances, the recovery process.

2.1 Existing Technologies

Related systems and several digital platforms and security solutions have been proposed and developed to address urban transport risks. **Safeboda** for example provides ride hailing services and basic GPS tracking (AL Namataaka, 2025), but lacks AI driven features and/or emergency integration with the police.

Commercial GPS tracking systems like **TrackSolid** offer fleet management tools (Ansari & Aslam, 2020) yet fall short in localized threat detection and forensic data collection.

Emergency mobile apps such as **HelpyNet** (Olumide & Gabriel, 2021) allow users to send SOS alerts but do not provide continuous rider tracking or proactive risk analysis.

In contrast, predictive policing systems like those studied by Mohler et al. (2015) and Wang et al (2013) demonstrate how AI can be used to detect and prevent crime

through location and behavior analytics

This project combines these strengths and addresses gaps by creating a low-cost, AI enhanced, police integrated platform tailored to Uganda's bodaboda sector.

Urban transport safety literature also confirms that informal systems remain under-digitized and under-governed (Schalekamp & Behrens, 2010). This proposal offers a localized digital tool to bridge that gap while strengthening law enforcement capabilities.

Recent studies, such as the AI-Powered Motorcycle Anti-Theft and Safety System [7], integrate biometric authentication, GPS, and AI for enhanced security (2025). Similarly, IoT-based smart helmets provide real-time monitoring for rider safety [8] (2025).

2.2 Web Based Tracking System

Web based tracking systems, such as those studied by (Gorret, 2025) in Uganda, focus primarily on stolen vehicles, not motorcycles. However, these are vulnerable to being disabled by criminals who locate and destroy the tracker. Similarly, the free GPS trackers rolled out in major cities (Kironde, 2025) have been limited by issues of privacy, technical reliability, and operational support. The proposed system will mitigate these limitations by providing a mobile application-based solution that is harder to disable and includes features to promote rider trust and adoption.

2.3 Comparison of Systems

Feature	**Tracksolid**	**Helpynet**	**Web Based Tacker**	**Free GPS Tracker**	**Proposed system**
Real-time Trackin	High	via GPS not continuous	For cars only	Unstable	Motorcycle and rural-urban

g					
Geofencing	Supports	Not Available	Limited to cars	Theft alerts	Customizable per rider
Alerts and Notifications	App	None	Vehicle alert thefts only	Basic	Instant alerts to riders and police
Mapping Providers	Google	GPS	Web map only	Very limited	Advanced mapping with offline fallback
Reporting and Analytics	Cloud	None	None	None	Rider and vehicle reports but above all—crime heatmaps
Point of Interest	Assets	Not applicable	Not detailed	None	Rider POIs, police stations, hotspots

2.4 Use of A.I in Transport Security

2.4.1 AI and ML in security applications

Machine learning techniques such as anomaly detection and clustering are used to predict risky behavior and identify security threats (Kumar et al, 2019). AI has also been employed in predictive policing, incident heat mapping and automated emergency responses. By leveraging these techniques, the proposed system can analyze rider movement patterns, speed and stops to identify abnormal behaviour that may indicate a crime is in progress. The system will use AI to learn what "normal" behaviour looks like for an individual rider and flag significant deviations and sudden stops in isolated areas at night, triggering an automated alert.

Recent advancements include AI-powered anomaly detection in transport security [9], which revolutionizes threat identification, and trustworthy AI for securing transportation systems [10] (recent), emphasizing collaborative attack detection in smart vehicles.

IoT in Public Safety

IoT technologies enhance public safety through real-time data collection and integration. For instance, IoT-enabled smart safety systems for two-wheelers [11] automatically trigger alerts with GPS coordinates during accidents (recent). Motorcycle security systems based on IoT [12] use Raspberry Pi for anti-theft features. The future of IoT in public safety projects growth to $10.5 billion by 2030 [13], highlighting its role in situational awareness.

Boda-Boda sector and insecurity

Howe & Davis (2004) identified the link between informal motorcycle transport and the rising urban crime in East Africa. Former police spokesperson Fred Enanga in 2024, and Tusingwire 2024 noted that most crimes against bodaboda riders happen at night or in normally isolated areas, often involving deception by passengers who lure riders to take them to such areas.

Identified Gaps

Existing studies lack integration of AI with IoT for real-time anomaly detection specific to informal transport like boda bodas. Basic GPS systems do not provide predictive analytics or direct police links, leading to delayed responses. There is also insufficient focus on privacy and ethical data use in developing contexts. This system fills these gaps by combining low-cost IoT tracking, AI-driven alerts, and secure police integration, tailored for Uganda's urban challenges.

Theoretical Framework

This study is grounded in two key theoretical frameworks: the application of smart ICT solutions such as IoT, and tracking technology in crime prevention and the use of AI/Machine Learning in security applications.

Existing literature reveals that the police in developed countries have adopted advanced ICT methods for crime detection and prevention. Tools such as CCTV, tracking technology, and mobile phones are also instrumental in these efforts. Tanui and Barmao (2016) show that GPS, mobile networks, and surveillance tools have improved crime response in Kenya. Similarly, Quarshie (2014) emphasizes the use of ICT to enhance forensic investigations across Africa.

Smart Policing Theory guides this study by emphasizing data-driven strategies to predict and prevent crime, enabling proactive interventions through AI analytics [14] (2025). The IoT Framework for Security provides a structure for integrating devices like GPS modules to enhance real-time public safety monitoring, ensuring seamless communication between riders and authorities [15] (2025).

2.5 Conceptual Framework

Input: Rider registration details such as name, registration plate number and area of operation, GPS data, IoT modules

Processes: SOS alerts, AI-based anomaly detection, secure communication.

Output: Real-time rider alerts, police dashboard updates, forensic logs, and community policing action.

Conceptual Framework Diagram

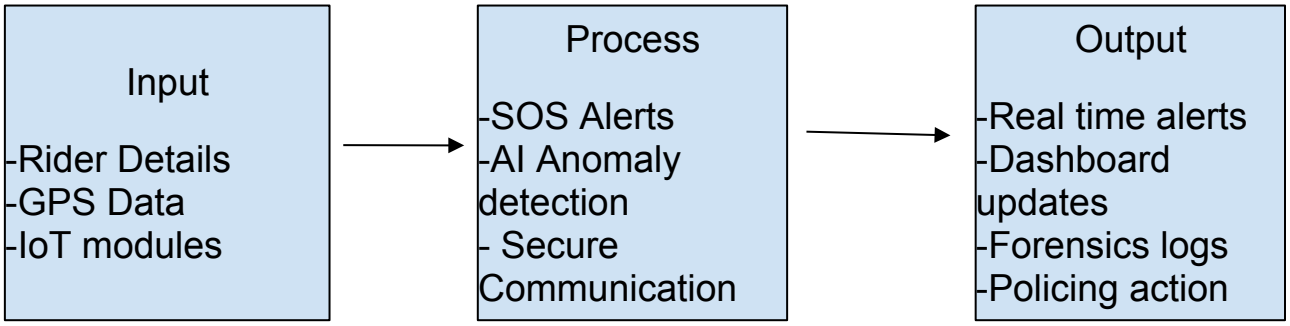

Chapter 3: Methodology

This is an applied systems development study following a design science research approach, focusing on creating and evaluating artifacts to solve practical problems in rider safety.

This project will follow an **Agile development methodology** to ensure flexibility and continuous stakeholder involvement throughout the development process. The methodology is divided into three main phases: data collection and prototyping,

system design and implementation, and testing and validation with active stakeholder involvement.

3.1 Data Collection

To gather requirements, we will conduct **interviews** with individual bodaboda riders, representatives from riders' associations, and police officers from the selected police stations, regulatory bodies such as the KCCA. The interviews will focus on identifying the specific challenges, security concerns, and user requirements for the platform.

Questionnaires: A questionnaire will be distributed to a sample of riders to gather quantitative data on their working areas, routes, and personal security practices. This data will inform the system's design and help in profiling.

Literature Review: we will review existing academic studies, police reports, and news articles to understand the existing problem landscape and security interventions.

Ethical Considerations

This study prioritizes ethical standards, including obtaining informed consent from all participants via signed forms explaining the purpose, risks, and benefits. Data privacy will be ensured through anonymization, secure storage, and compliance with Uganda's Data Protection and Privacy Act. Confidentiality of personal tracking data will be maintained, with access limited to authorized personnel. Participants can withdraw at any time without penalty.

3.2 System Design and Implementation

We will use existing database systems and models to design a model for capturing rider details. The system will be developed using Python and SQL for the backend, and Flutter for the frontend. This combination was chosen for its performance, security, and cross-platform capabilities.

- **Python** for backend development, data handling, and rapid prototyping.
- **SQL** for efficient database management and integration with the backend.
- **Flutter** for cross-platform mobile applications development with high performance and a good user interface.
- IoT device: GPS Module and GSM Sim
- Security : AES encryption and role based access

System Architecture Diagram

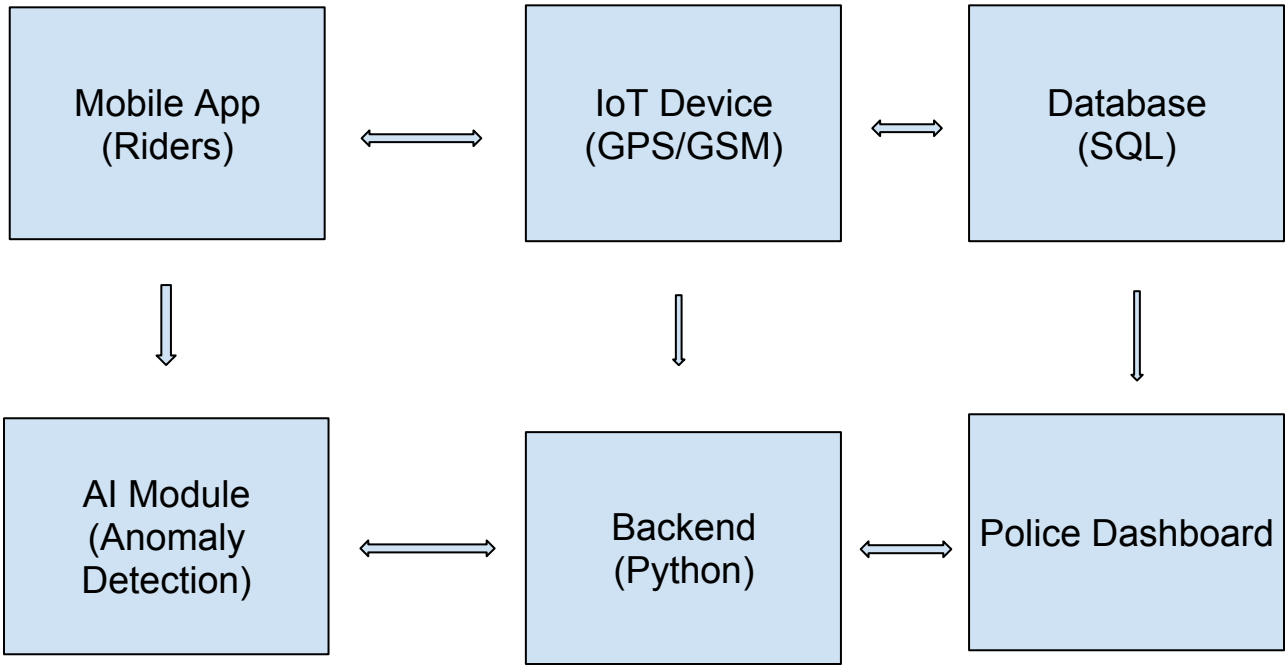

The diagram shows interactions: Riders use the app to send data via IoT to the backend, where AI processes it and updates the police dashboard.

AI Module: The AI module will use a combination of machine learning techniques. For anomaly detection, it will use an unsupervised clustering algorithm (e.g., K-means) to establish "normal" movement patterns for each rider based on historical data such as location, speed and time. The model will

be trained on aggregated anonymized rider data collected during the pilot phase, using input variables like GPS coordinates, velocity, acceleration, and time of day. Evaluation will involve metrics such as precision, recall, and F1-score to ensure accuracy.

A deviation from this pattern (e.g., a sudden, prolonged stop in an unusual location) will trigger an alert.

Supervised learning may be incorporated for labeled incident data to improve prediction over time.

3.3 Implementation

The prototype will be implemented in a cloud-based environment to ensure scalability and reliability. A minimum viable product (MVP) will be developed first, focusing on core functionalities: rider registration, real-time tracking, and a basic SOS alert system. Law enforcement will be provided with a web-based dashboard to monitor alerts and view rider data.

3.4 Testing and Validation

The system prototype will undergo a rigorous two-part testing process:

- **Unit and Integration Testing:** We will conduct unit tests on individual components like the Mobile App, IoT device and the dashboard separately to ensure that they all communicate effectively. Tools such as Postman for API testing, Firebase for hosting, and GPS emulator for simulating locations will be used.

- **User Acceptance Testing (UAT):** The prototype will be tested by a sample of 15 riders and 5 police officers from the Namugongo and Kyaliwajjala stations. The UAT will measure the system's success against the following metrics:

- **Response Time:** How quickly does an emergency alert reach other riders and the police dashboard? (Target: less than 60 seconds).
- **Accuracy:** What is the accuracy of the GPS tracking? (Target: within a 5-meter radius).
- **User Satisfaction:** What is the average rating on a 5-point scale for ease of use and perceived safety? (Target: at least 4.0).
- **Anomaly Detection Accuracy:** What percentage of actual incidents are correctly flagged by the AI module? (Target: over 90%).
- **Number of incidents successfully** responded to by fellow riders and police.

Feedback from this phase will be collected via surveys and interviews, and the system will be refined accordingly. In line with data protection protocols, all participants will sign a confidentiality agreement to ensure their personal information and movement data are protected and used solely for this research.

4.0 OUTCOMES

By the end of the project, we expect to have:

- A functional prototype consisting of a mobile application, IoT device, and a police dashboard.
- A fully developed community policing platform that has been validated by a sample of local riders and police, with a recorded user satisfaction rate of at least 80%.
- Contributed valuable data and insights to contribute to academic research on ICT for crime prevention and road safety in developing countries.

The system can support SDG 11 (Sustainable Cities and Communities) by promoting safe, inclusive, and resilient urban transport through technology-enabled crime

prevention and emergency response. Additionally, it aligns with Uganda's Digital Transformation Roadmap [16] (2023-2028) by advancing digital infrastructure, e-services for public safety, and inclusive digital access to enhance governance and citizen well-being.

4.1 Measuring success

Technical success will be measured by delivery speed consisting of response time between one rider app to another, GPS accuracy and AI accuracy.

Community success will be measured by:

- Increased incidents reported through the system
- Reduced response time to rider emergencies
- Increased collaboration among riders (peer to peer support)
- Improved perception of police responsiveness as surveyed among riders.
- Percentage of pre-rescued riders and bikes using the system alerts

References

[1]. Police warn bodaboda riders on targeted attacks March (2024).
https://www.upf.go.ug/police-warns-bodaboda-riders-on-targeted-attacks-robberies/

[2]. Informal Transportation in Uganda: A Case Study of the Boda Boda

[3]. Motorcycle Theft Statistics: Every 9 Minutes a Bike is Stolen
https://worldmetrics.org/motorcycle-theft-statistics/

[4]. "Missing Boda rider found dead on the road" (2023).
https://www.monitor.co.ug/uganda/news/national/missing-boda-boda-rider-found-buried-on-roadside-4152194

[5] J. Howe and G. Davis, "Boda-boda – Uganda's rural and urban low-capacity transport services," Transp. Rev., vol. 22, no. 4, pp. 439–458, 2002.

[6] F. Enanga, "Police spokesperson statement," 2024.

[7] A. Author, "AI-Powered Motorcycle Anti-Theft and Safety System," ResearchGate, Oct. 2025.

[8] B. Author et al., "IoT based Smart Helmet with Motorbike Unit for Rider's Safety," ITM Conf., Oct. 2025.

[9] "The role of AI-powered anomaly detection in transport security," Security Journal Americas, Jan. 2024.

[10] "Trustworthy Artificial Intelligence for Securing Transportation Systems," NSF PAR, recent.

[11] "IOT Enabled Smart Safety System For Two-Wheelers," Kronika Journal, recent.

[12] "Motorcycle security system based on Internet of Things (IoT)," JIAEE, Jul.

2024.

[13] "The Future of IoT in Public Safety," Soracom, 2026.

[14] "Smart Policing: Data-Driven Innovations in Crime Prevention," ResearchGate, Jun. 2025.

[15] "Recommended Technology Management for Smart Policing," Clovia Hamilton, Sep. 2025.

[16] Ministry of ICT and National Guidance, "Digital Transformation Roadmap FY2023/24-2027/28," Uganda, 2023

Appendices